DataSheet

MT-X734

Multiplexer module, 2-wire,16×1,4 banks, 250VAC/220VDC, 2A

This document contains the specifications for MT-X734.Specifications are typical at 25°C unless otherwise noted.

Caution Using the MT-X734 in a manner not described in this document may impair the protection the MT-X734 provides.

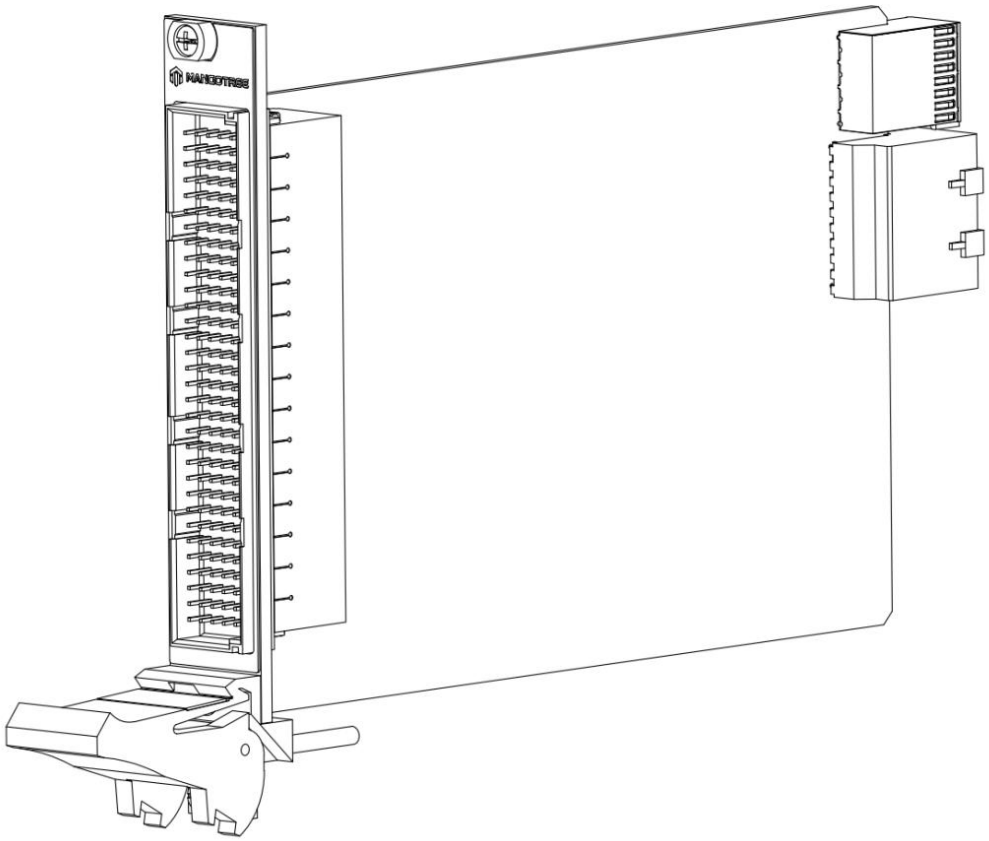

MANGOTREE

MT-X734 Connectivity

Pin definition of DSUB connector.

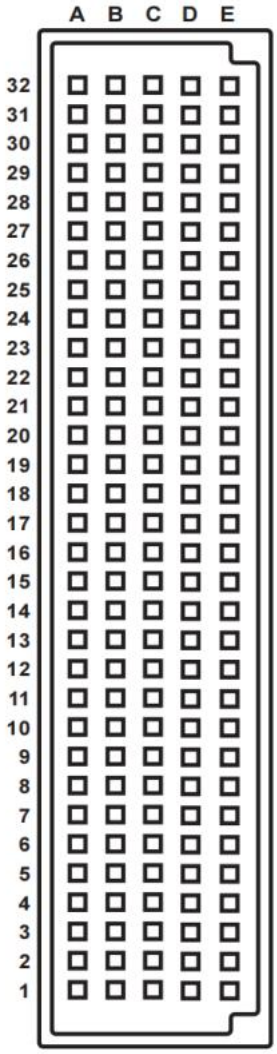

	A	B	C	D	E
32	COM1+	CH1_00+	CH1_00-	CH1_01+	CH1_01-
31	COM1-	CH1_02+	CH1_02-	CH1_03+	CH1_03-
30	--	CH1_04+	CH1_04-	CH1_05+	CH1_05-
29	--	CH1_06+	CH1_06-	CH1_07+	CH1_07-
28	--	CH1_08+	CH1_08-	CH1_09+	CH1_09-
27	--	CH1_10+	CH1_10-	CH1_11+	CH1_11-
26	--	CH1_12+	CH1_12-	CH1_13+	CH1_13-
25	--	CH1_14+	CH1_14-	CH1_15+	CH1_15-
24	COM2+	CH2_00+	CH2_00-	CH2_01+	CH2_01-
23	COM2-	CH2_02+	CH2_02-	CH2_03+	CH2_03-
22	--	CH2_04+	CH2_04-	CH2_05+	CH2_05-
21	--	CH2_06+	CH2_06-	CH2_07+	CH2_07-
20	--	CH2_08+	CH2_08-	CH2_09+	CH2_09-
19	--	CH2_10+	CH2_10-	CH2_11+	CH2_11-
18	--	CH2_12+	CH2_12-	CH2_13+	CH2_13-
17	--	CH2_14+	CH2_14-	CH2_15+	CH2_15-
16	COM3+	CH3_00+	CH3_00-	CH3_01+	CH3_01-
15	COM3-	CH3_02+	CH3_02-	CH3_03+	CH3_03-
14	--	CH3_04+	CH3_04-	CH3_05+	CH3_05-
13	--	CH3_06+	CH3_06-	CH3_07+	CH3_07-
12	--	CH3_08+	CH3_08-	CH3_09+	CH3_09-
11	--	CH3_10+	CH3_10-	CH3_11+	CH3_11-
10	--	CH3_12+	CH3_12-	CH3_13+	CH3_13-
9	--	CH3_14+	CH3_14-	CH3_15+	CH3_15-
8	COM4+	CH4_00+	CH3_00-	CH4_01+	CH4_01-
7	COM4-	CH4_02+	CH3_02-	CH4_03+	CH4_03-
6	--	CH4_04+	CH3_04-	CH4_05+	CH4_05-
5	--	CH4_06+	CH3_06-	CH4_07+	CH4_07-
4	--	CH4_08+	CH3_08-	CH4_09+	CH4_09-
3	--	CH4_10+	CH3_10-	CH4_11+	CH4_11-
2	--	CH4_12+	CH3_12-	CH4_13+	CH4_13-
1	--	CH4_14+	CH3_14-	CH4_15+	CH4_15-

Hardware Diagram

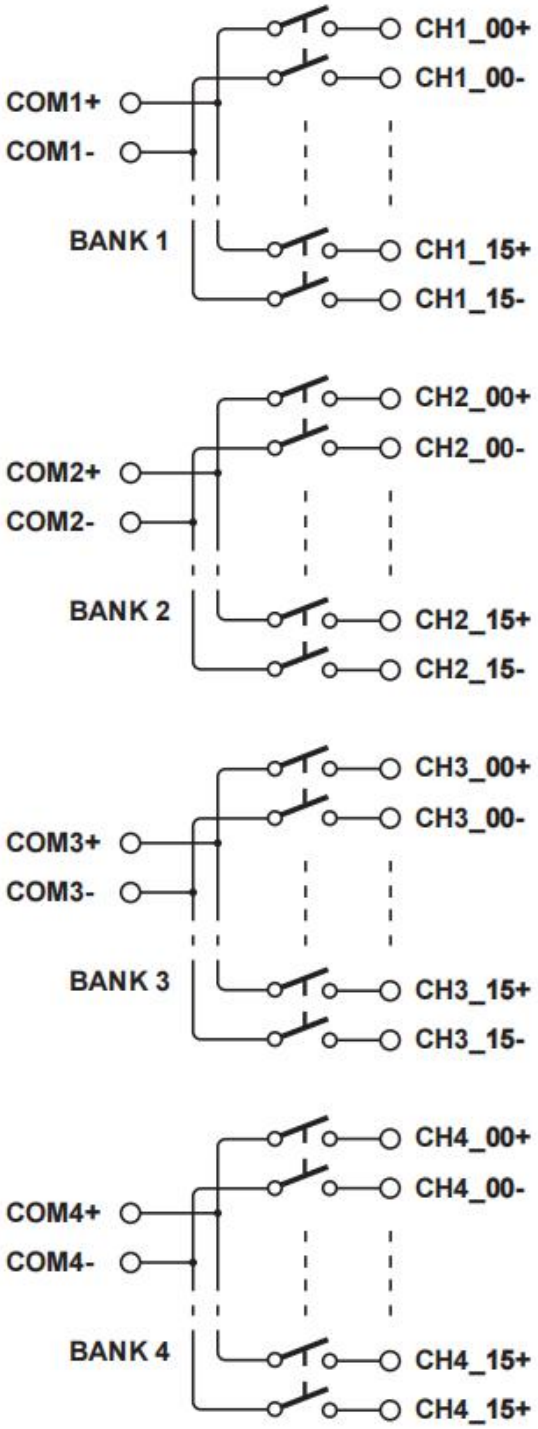

MT-X734 Specifications

Specifications are valid at 23 °C unless otherwise noted.

Input Characteristics

Number of channels	64
Topology	2-wire, 16×1, 4 banks
Maximum switching voltage	220V DC,250V AC
Maximum switching power (per channel)	
AC	62.5 VA
DC (30 V to 220 V)	60 W
Maximum current (per channel)	2 A
DC path resistance	
Initial	<0.8 Ω
End-of-life	⩾1.8 Ω
Relay operate time	
Typical	3 ms
Maximum	6 ms

Safety Voltages

This product is designed to meet the requirements of the following electrical equipment safety standards for measurement, control, and laboratory use:

- IEC 61010-1, EN 61010-1
- UL 61010-1, CSA C22.2 No. 61010-1

CE Compliance CE

This product meets the essential requirements of applicable European Directives, as follows:

- 2014/35/EU; Low-Voltage Directive (safety)
- 2014/30/EU; Electromagnetic Compatibility Directive (EMC)
- 2014/34/EU; Potentially Explosive Atmospheres (ATEX)

Shock and Vibration

To meet these specifications, you must panel mount the system.

Random vibration	
Operating (IEC 60068-2-64)	0.3g_{rms}, 5 Hz to 500 Hz
Nonoperating (IEC 60068-2-6)	2.4g_{rms}, 5 Hz to 500 Hz
Operating shock (IEC 60068-2-27)	30 g, 11 ms half sine;

Environmental

Refer to the manual for the chassis you are using for more information about meeting these specifications.

Operating temperature	0 °C to 55 °C
Storage temperature	-20°C to 70 °C
Operating humidity (IEC 60068-2-78)	10% RH to 90% RH, noncondensing
Storage humidity (IEC 60068-2-78)	5% RH to 95% RH, noncondensing Pollution
Degree	2
Maximum altitude	2,000 m

Config文本

MT-DAQ设备的开发和使用依赖于Config配置文本，只有正确配置该文本，才能保证设备的正常运行。不同型号的设备或板卡对应的配置参数是不同的。Python、LabVIEW和C#三种编程语言的Config配置文本完全相同。

通用Config配置文本通过MT-Master软件主页导出获得，用户可以根据实际设备或板卡的参数对配置文本进行修改配置，或者按照文本默认参数配置运行。

Config配置文本中的各项参数含义及其具体配置可以参考MT-DAQ上手指南，指南链接附于下文Support板块。

使用MT产品过程中如有任何疑问，可以通过访问官网：http://www.mangotree.cn联系专业客服咨询。

MangoTree官网

Support

MT-Master上手指南：

http://server.mangotree.cn:9900/WebFile/Downloads/上手指南/MT-Master/

Master上手指南

MT-Master视频教程：

http://server.mangotree.cn:9900/WebFile/Downloads/视频教程/MT-Master/

Master视频教程

MT-DAQ上手指南：

http://server.mangotree.cn:9900/WebFile/Downloads/上手指南/MT-DAQ/

DAQ上手指南

MT-DAQ视频教程：

http://server.mangotree.cn:9900/WebFile/Downloads/视频教程/MT-DAQ/

DAQ视频教程

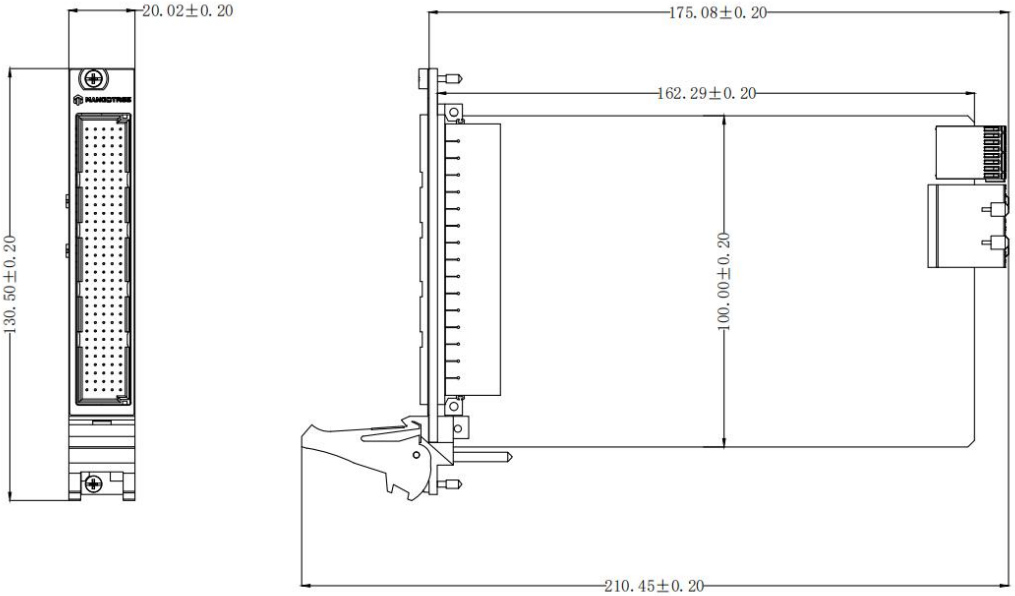
20.02±0.20
175.08±0.20
162.29±0.20
130.50±0.20
100.00±0.20
210.45±0.20